Microswitches

SOCOJE
SOCOJE INTELLIGENT TECHNOLOGY

Specifications

Rating:	3A 250VAC
Operating Force:	100gf
Contact Resistance:	50mΩ Max

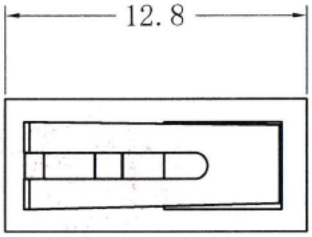

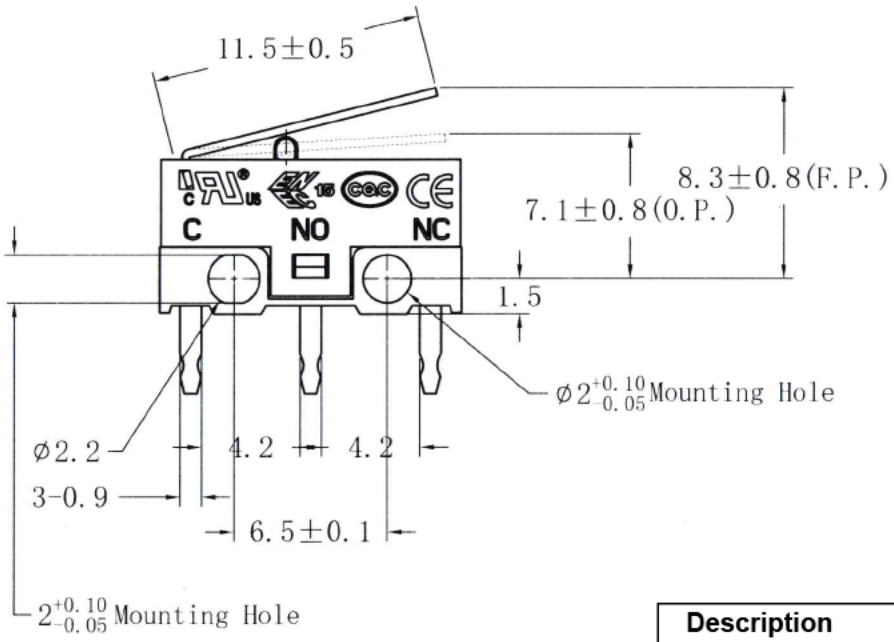

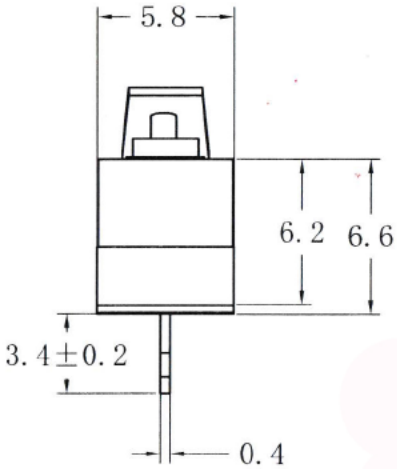

Description	Ref Code
11mm Lever Subminiature PCB Microswitch SPDT 3A	481692