Microswitches

SOCOJE
SOCOJE INTELLIGENT TECHNOLOGY

Specifications

Rating:	16A 250VAC
Operating Force:	5N Max
Contact Resistance:	50mΩ Max
Insulation Resistance:	100MΩ Min
Dielectric Strength:	1000VAC 1 minute
Electrical Life:	50,000+ Cycles

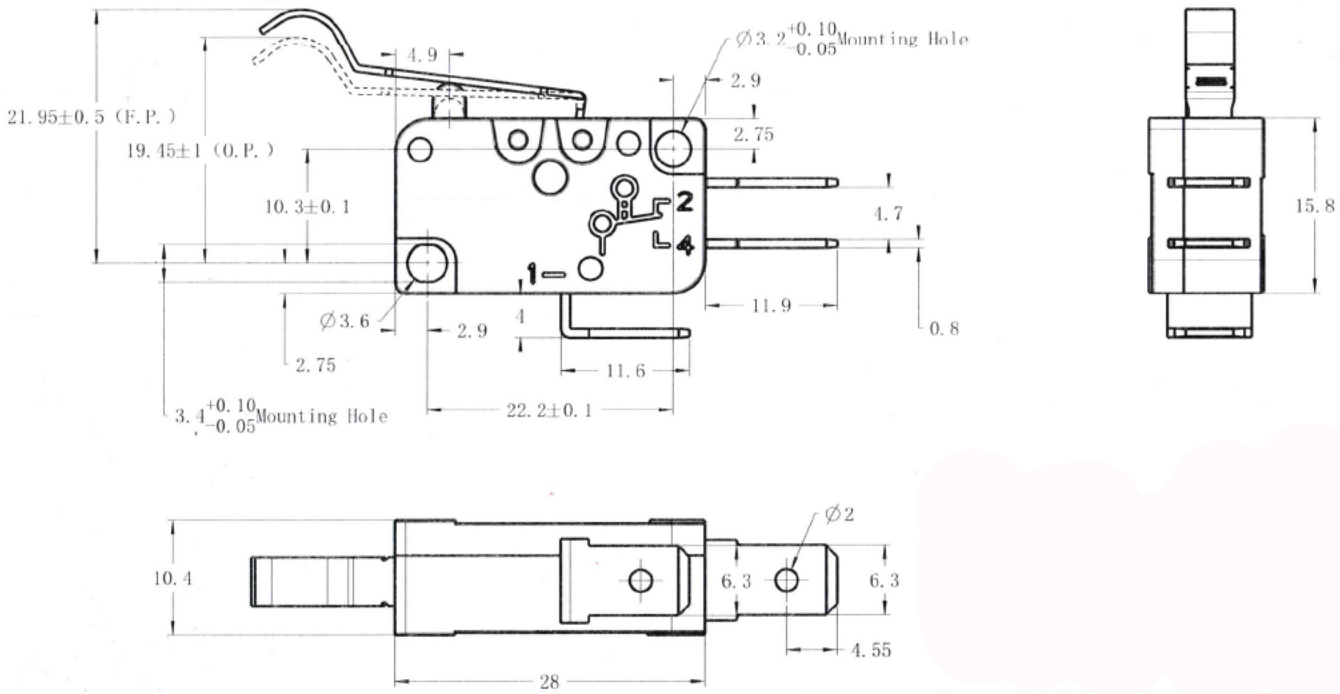

Description	Ref Code
25mm Arc Lever V3 Microswitch SPDT 16A 250VAC	481681

SOCOJE
SOCOJE INTELLIGENT TECHNOLOGY