Microswitches

SOCOJE
SOCOJE INTELLIGENT TECHNOLOGY

Specifications

Rating:	10A 250VAC
Protection Level:	IP67
Operating Force:	300gf
Contact Resistance:	50mΩ Max
Insulation Resistance:	100MΩ Min 500VDC
Electrical Life:	100,000+ Cycles

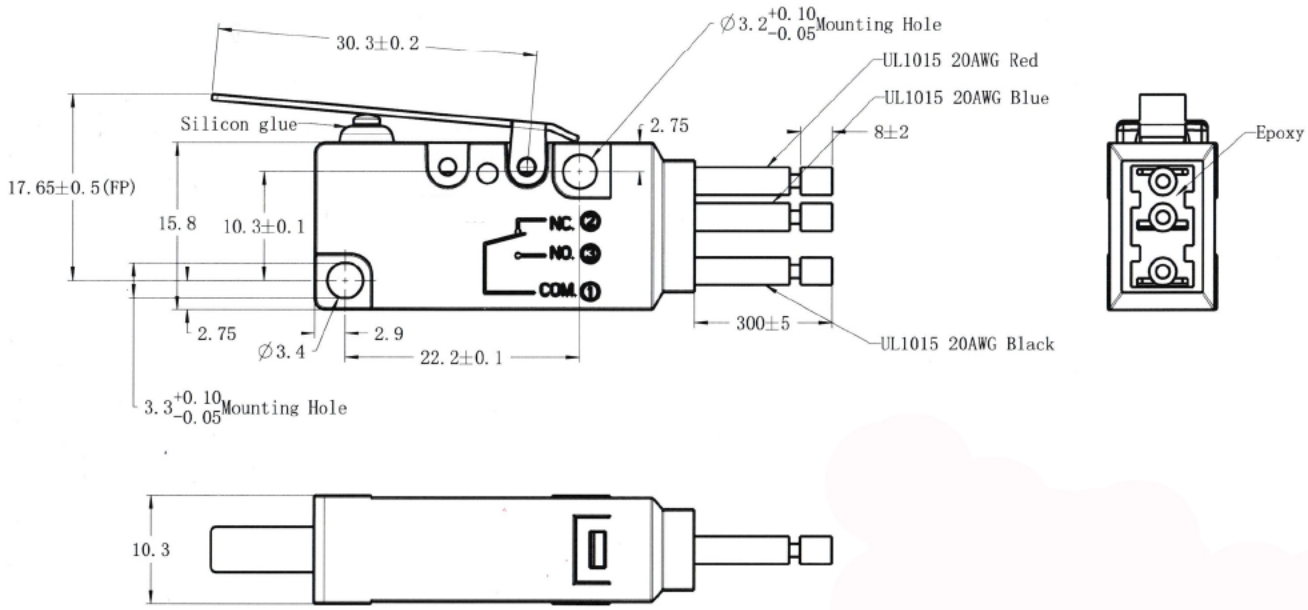

Description	Ref Code
30mm Lever Waterproof Prewired Microswitch SPDT 10A IP67	481710

SOCOJE
SOCOJE INTELLIGENT TECHNOLOGY