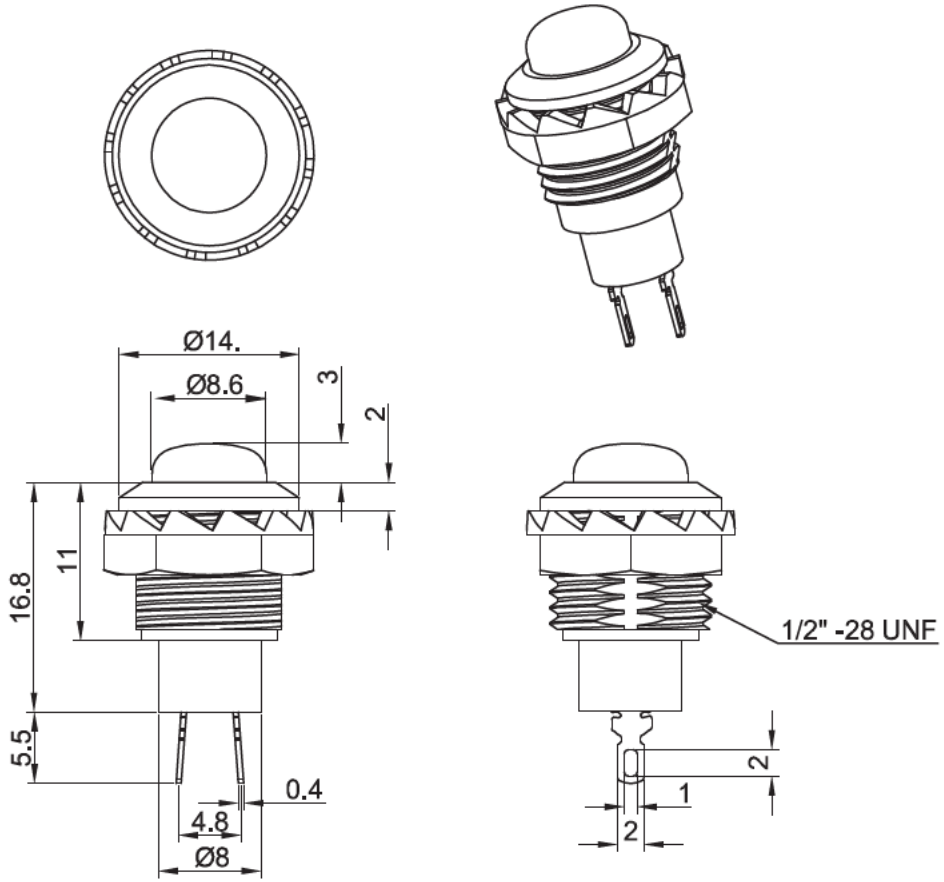

Rating: 3A 125V AC
1.5A 250V AC
Contact Resistance: 50mΩ Max
Insulation Resistance:DC 500V 100MΩ Min
Dielectric Strength:AC 1000V1minute
Operating Force:150± 50g
Travel: 2.0± 0.4mm
Operating Life:50,000 cycles
Operating Temperation:0℃~85℃
Function: OFF-(ON)

CUT-OUT

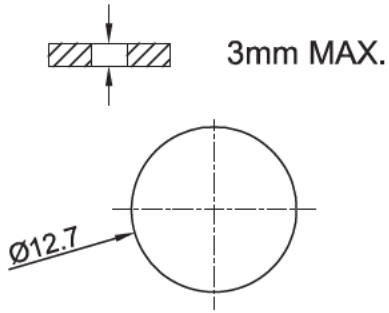

MATERIAL : Base:PA66 UL rated :94V-2;
Cover:ABS;
Terminal: Copper,silver or tin plated;
Nut: PBT.

REVISION	DESCRIPION	REVISED BY	TOLEANCES .X+0.3 .XX+0.15 ANGLE ½°	UNIT mm	PART NAME	PB SPEC DRAWING	DWG NO