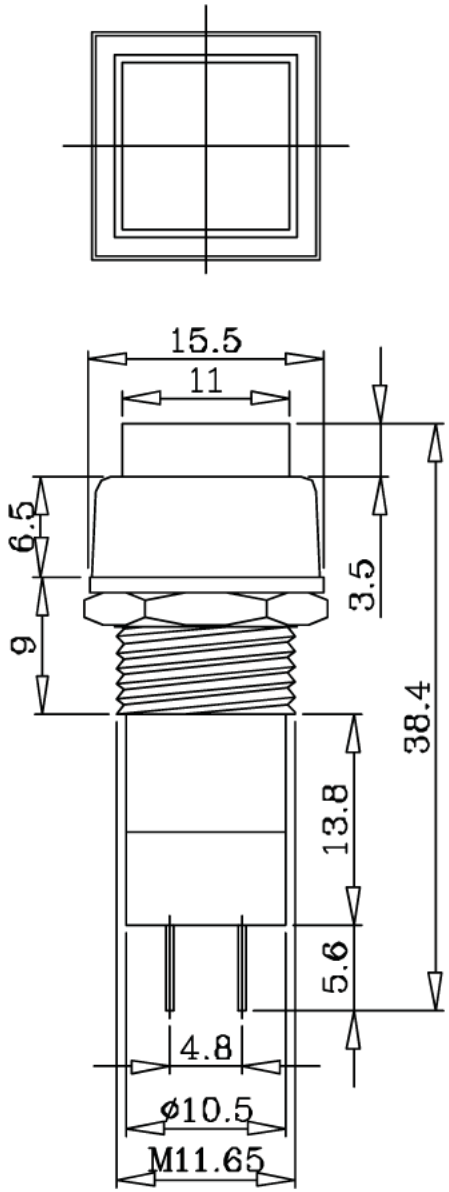

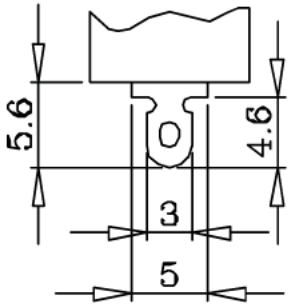

SPECIFICATIONS

1.CIRCUIT : A:ON-OFF B:(ON)-OFF

2.RATING : 1A 125VAC/250VAC

3.CONTACT RESISTANCE : 30mΩ Max

4.INSULATION RESISTANCE : DC 500V 100MΩ Min

5.DIELECTRIC STRENGTH : AC 1000V 1 MINUTE

6.ELECTRICAL LIFE : 5000 CYCLE Min

7.MECHANICAL LIFE : 10,000 CYCLE Min

8.TERMINAL MATERIAL :

COPPER,ALLOY,(SILVER OR GOLD),PLATED

9.PUSH FORCE : >0.3kg

10.BUTTON COLOR : RED,YELLOW,ORANGE,BLACK,GREEN

NOTE: TOLERANCES UNLESS OTHERWISE SPECIFIED: ± $\frac{.012}{0.3}$(in/mm)

REVISION	DESCRIPION	REVISED BY	TOLEANCES .X .XX ANGLE ½°					UNIT mm	PART NAME	PBS SPEC DRAWING	DWG NO
4			DRAWN BY		DESIGNED BY		SCALE				WS0450A
3											
2			CHECKED BY		APPROVED BY		DATE	2006.08.30	PART NO	PBS-12 (A/B)	
1 2006.08.30	換新圖框,重新出圖										