SOCOJE

SOCOJE INTELLIGENT TECHNOLOGY

Emergency Stop Switch ∅16mm/∅19mm/∅22mm

Product Description

The Turn to Release Emergency Stop Switches provides you with a way to stop your ctuator instantly in case of emergency. All you do is press the button down and it will lock in the Off position, stopping the movement of your actuator. To put it back in the On position, just turn the switch clockwise to release it. Please be aware you may require a relay for actuator control.

Specifications

Max Rating: Ith: 5A, Ui: 250VAC
Switch Rating: 250VAC 0.5A
Mechanical Life: 1,000,000 Cycles
Electrical Life: 50,000 Cycles
Contact Resistance: 50mΩ Max.
Insulation Resistance: 1000 MΩ Min.
Dielectric Strength: 2,000VAC
Operating/Storage Temperature: -20°C to 55°C
Panel Thickness: 1-5mm
Mounting Nut Torque: 5-14Nm

Features & Benefits

- 16, 19 or 22mm diameter panel cutout
- Push lock - Turn Release
- 1NO1NC, 2NO2NC
- Solder lug (2.8X0.5mm)
- IP65 rated

Part Number Configurator

Series	Actuator ** Options	Terminal Options	Function Options	Material Options	Graphic (Optional)
ES16 - 16mm* ES19 - 19mm ES22 - 22mm	NONE - Smooth edge K - Knurled edge	NONE Solder-lug (2.8x0.5)	11-1NO1NC 22-2NO2NC	S - Stainless Steel N - Nickel Plated-brass	Customizable

NOTES:
* ES16 for plastic body.
** Accept customizable.

Specifications subject to change without notice

Applications / Markets

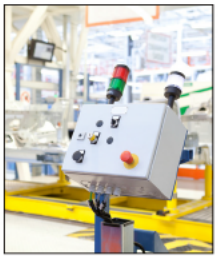

Emergency Stop Switch
∅16mm

Dimensions

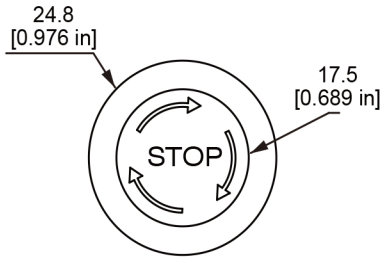

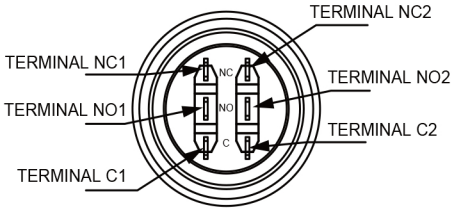

C = Common
NO = Normally open
NC = Normally closed

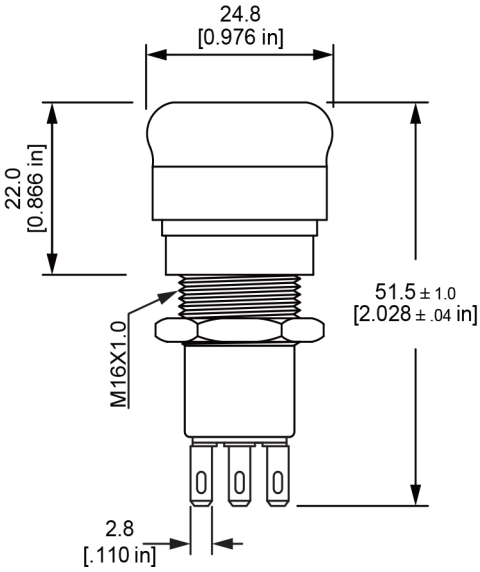

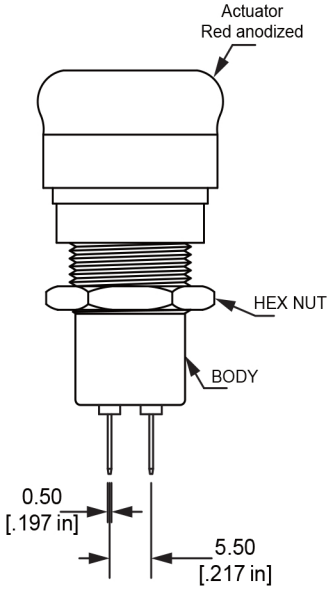

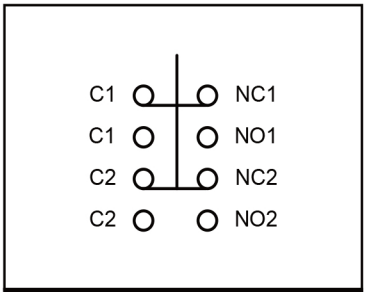

DPDT

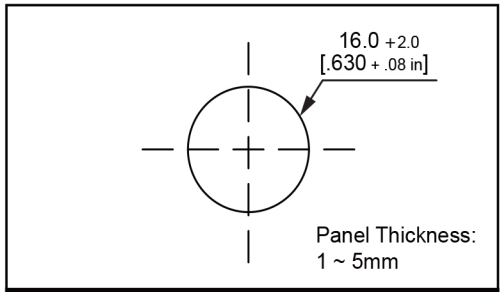

PANEL CUTOUT

Emergency Stop Switch
∅19mm

Smooth Edge

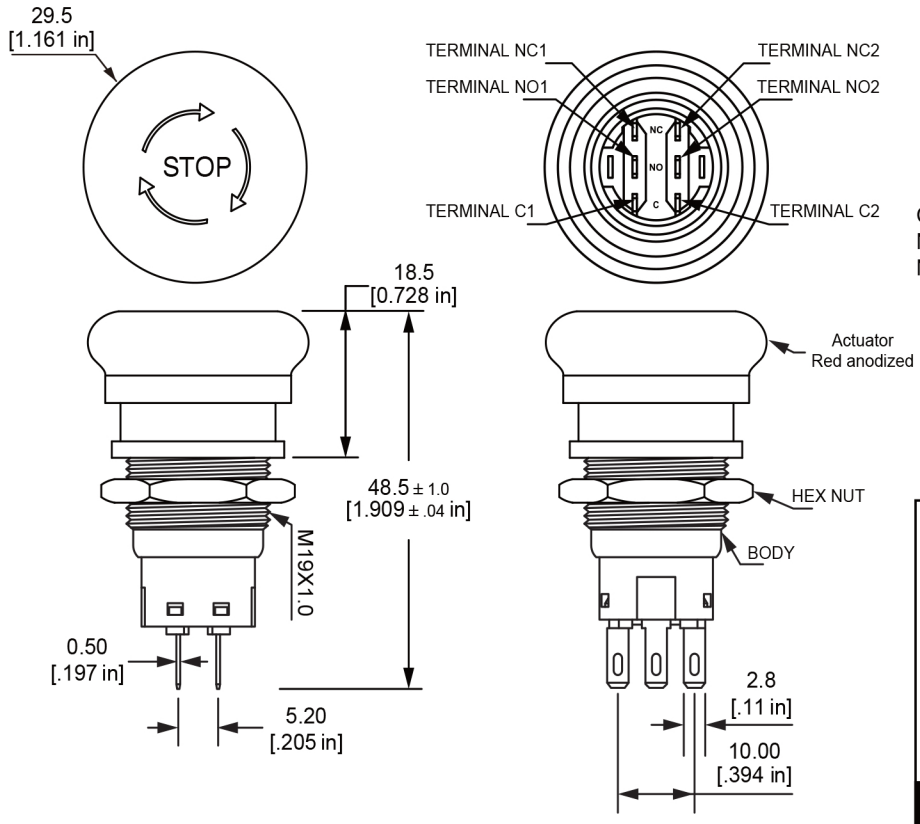

C = Common
NO = Normally open
NC = Normally closed

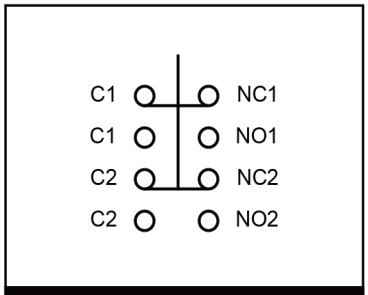

DPDT

Knurled Edge

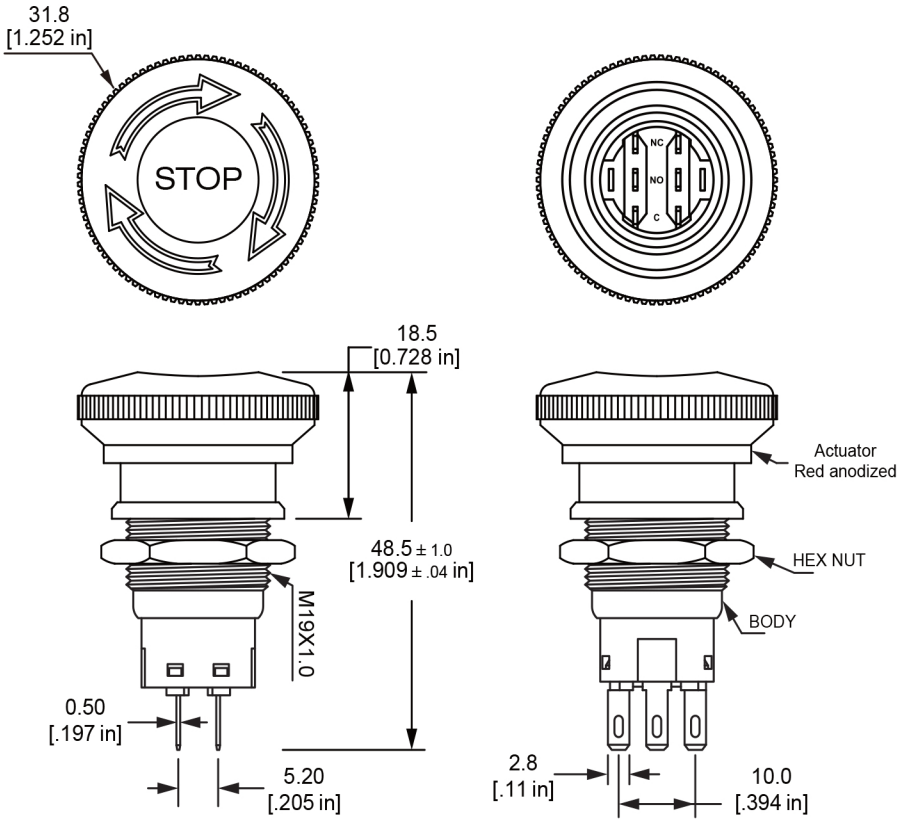

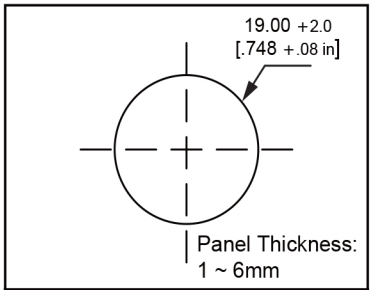

PANEL CUTOUT

Emergency Stop Switch
∅22mm

Smooth Edge

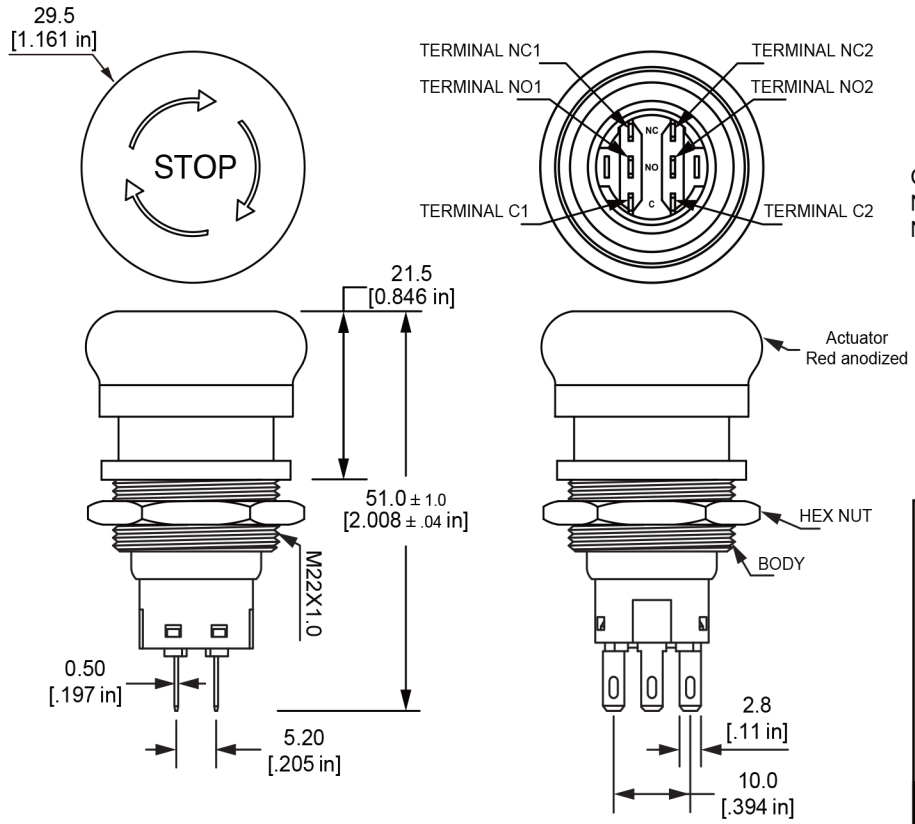

C = Common
NO = Normally open
NC = Normally closed

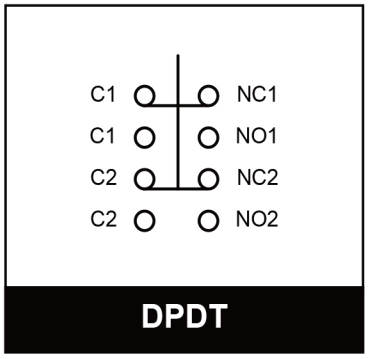
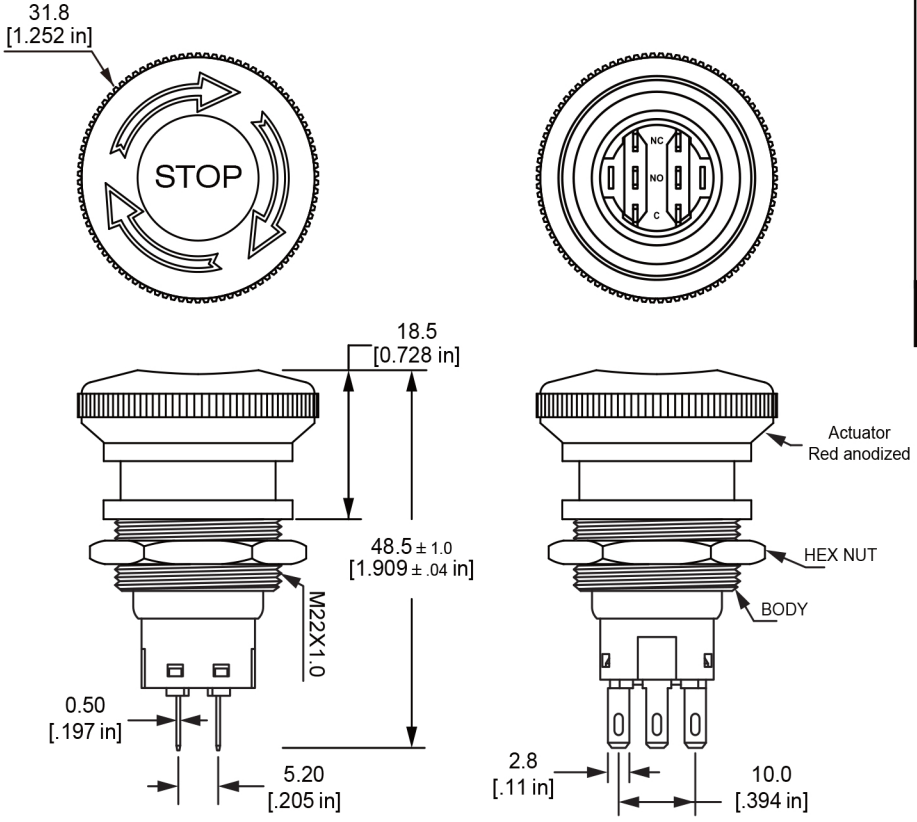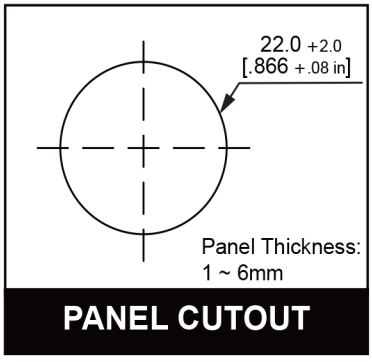
Knurled Edge