ROCKER SWITCH MODEL MR-3

RATING: 10A 125/250VAC, (UL/CUL)
10(4)A 250V~ T85 (FI/ENEC16)
CONTACT RESISTANCE:20mΩ INITIAL(MAX),
INSULATION RESISTANCE:500VDC 100MΩ(MIN),
UITASTAND VOLTAGE:1000VAC FOR 1 MINUTE.

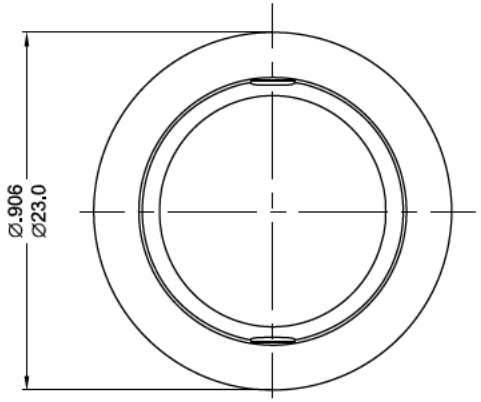

SWITCHING CIRCUIT

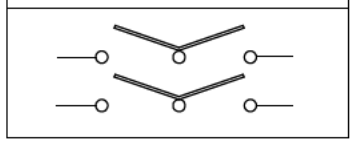

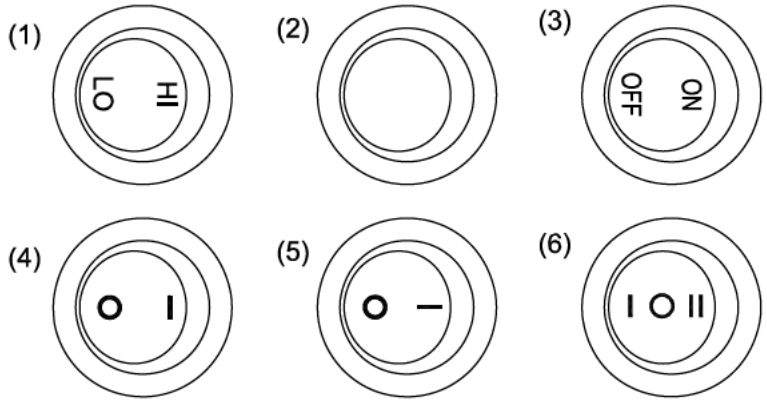

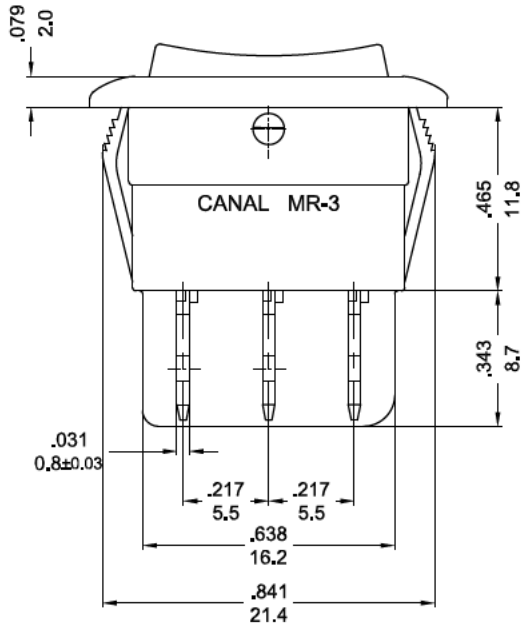

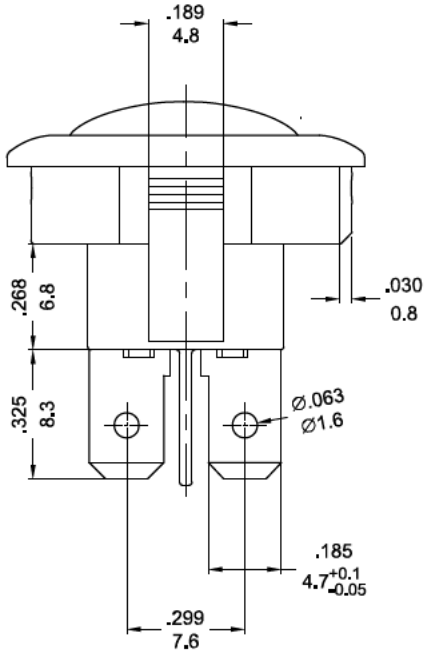

SCALE:1/1

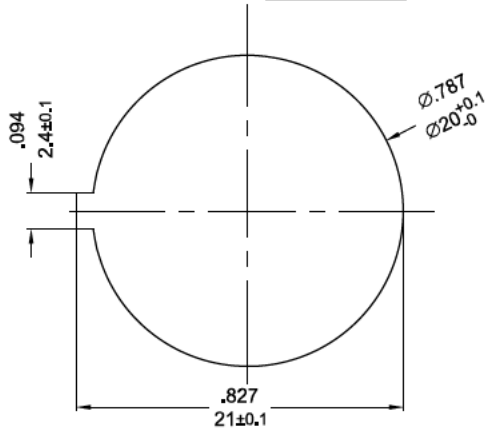

NOTE: TOLERANCES UNLESS OTHERWISE PECIFIED:± 0.012/0.3 (in/mm)

PANEL CUTOUT DIMENSION TABLE

REVISION	DESCRIPTION	REVISED BY	TOLERANCES				ANGLE ½°	UNIT	mm	PART NAME	MR-3 ROUND SPEC DRAWING	DWG NO
4			DRAWN BY		DESIGNED BY		SCALE	2/1				
3												
2 2013.05.03	取消CSA. 重新出圖		CHECKED BY		APPROVED BY		DATE	2012.03.08		PART NO		
1 2012.03.08	首次出圖											