Specification :

Contact resistance: 20m ohm max. (initial)
Insulation resistance: 50M ohm min. (at 500V DC)
Dielectric strength: 1,500V AC 50/60 Hz for 1 minute
Service life: Mechanically: 100,000 operations min.
Electrically: 30,000 operations min.
Rating : 3A 125V AC / 1.5A 250V AC
Function: ON - OFF SPST

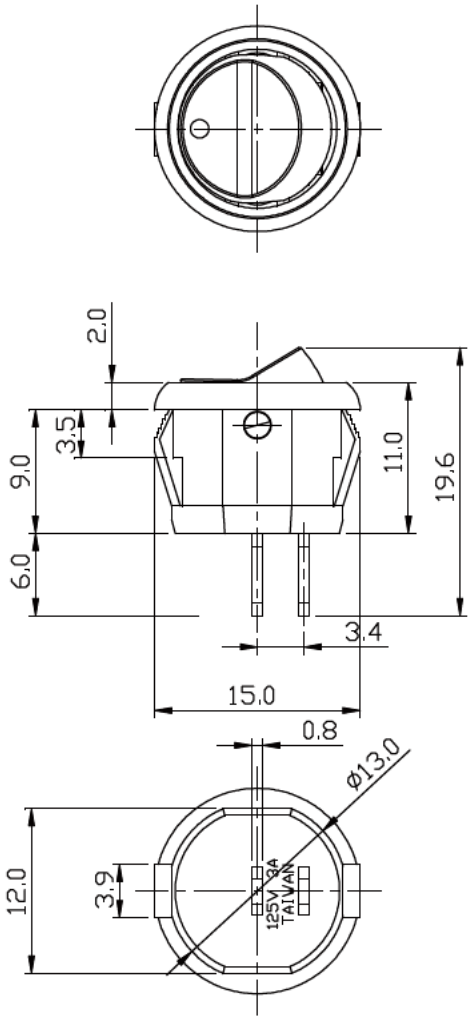

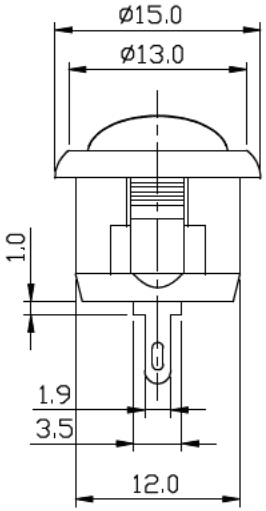

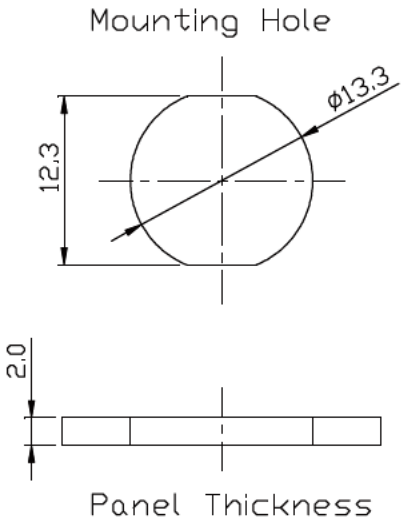

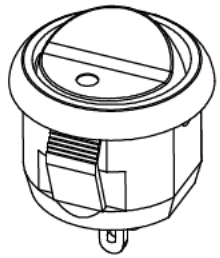

Solder Terminal Type

NOTE: TOLERANCES UNLESS OTHERWISE SPECIFIED : ± $^{.012}_{0.3}$ (mm).

REVISION	DESCRIPION	REVISED BY	TOLEANCES .X .XX ANGLE ½°					UNIT mm	PART NAME		DWG NO
4			DRAWN BY		DESIGNED BY		SCALE				WS2564B
3											
2 2017.06.09	圖面整理,重新出圖		CHECKED BY		APPROVED BY		DATE	2014.11.19	PART NO	SW-2737-A	
1 2014.11.09	首次出圖										