ROCKER SWITCH MODEL MR5 SERIES

RATING:3A 250VAC (UL/CUL)
6A 125VAC (UL/ CUL)
3A 250VAC~ μT100/55(VDE/ENEC/CQC)
DIELECTRIC VOLTAGE-WITHSTAND:1,000VAC FOR 1 MINUTE
INSULATION RESISTANCE:500VDC 100MΩ (MIN.)
CONTACT RESISTANCE:20mΩ INITIAL (MAX.)

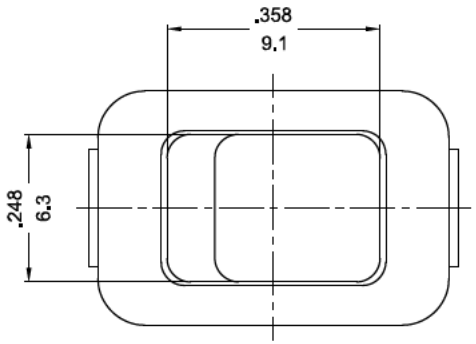

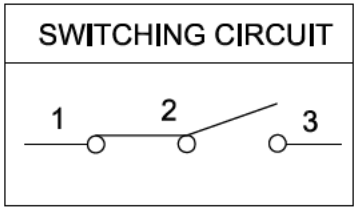

ON-ON

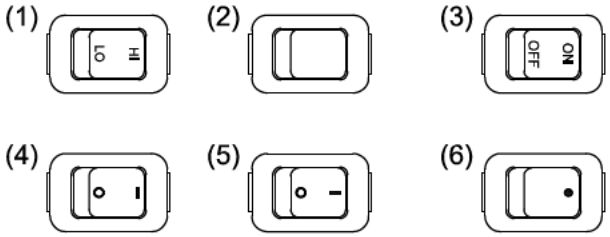

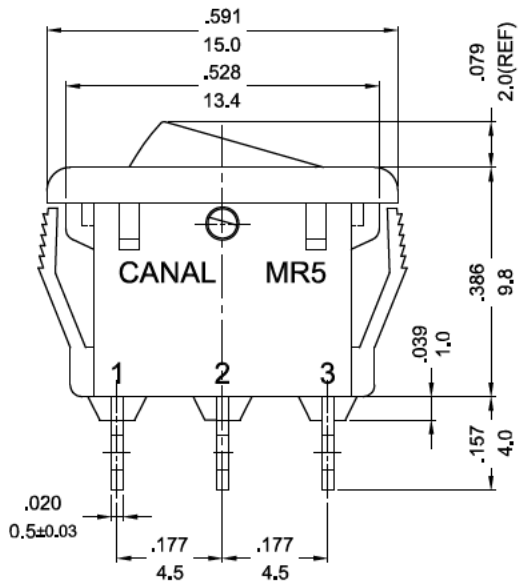

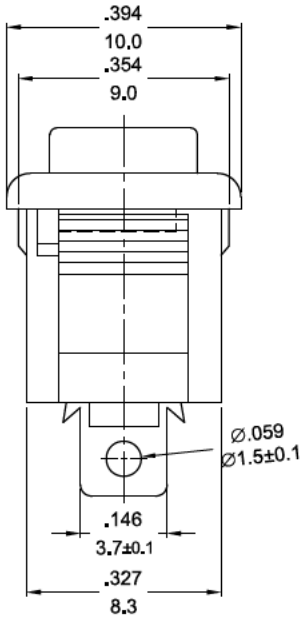

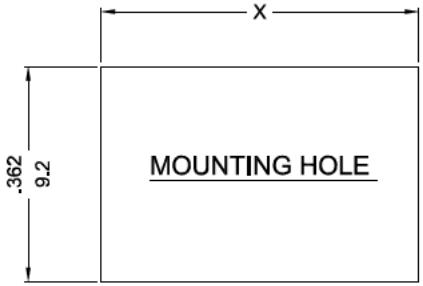

	X Cutout Dimension	Panel Thickness
A	.535/13.6 $^{+0}_{-0.1}$	0.75~1.25
B	.539/13.7 $^{+0}_{-0.1}$	1.25~2.0
C	.543/13.8 $^{+0}_{-0.1}$	2.0~2.5

NOTE: TOLERANCES UNLESS OTHERWISE SPECIFIED:± .012/ 0.3(in/mm)

REVISION	DESCRIPTION	REVISED BY	TOLERANCES				ANGLE ½°	UNIT	mm	PART NAME	MR5 SPEC DRAWING	DWG NO
4			DRAWN BY		DESIGNED BY		SCALE	3/1				
3												
2 2014.01.20	整理圖面，重新出圖；		CHECKED BY		APPROVED BY		DATE	2012.12.17		PART NO		
1 2012.12.17	首次出圖											