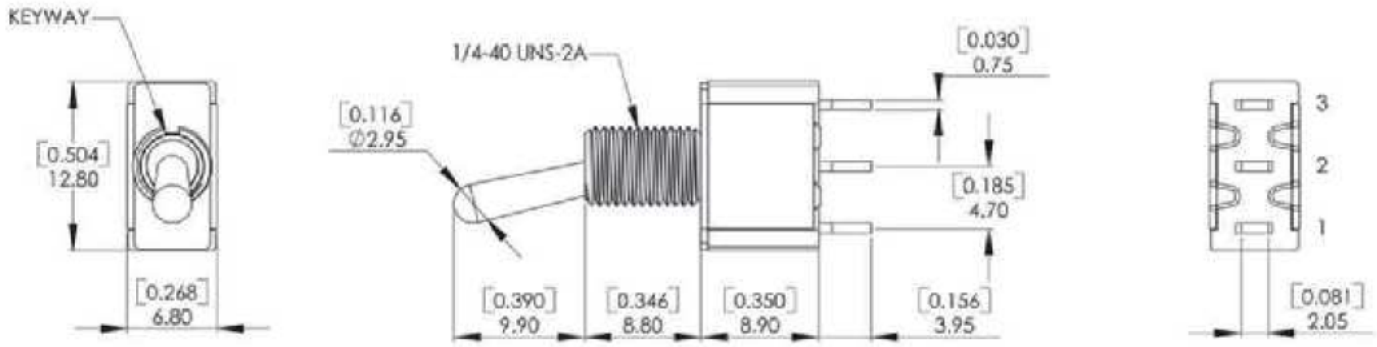

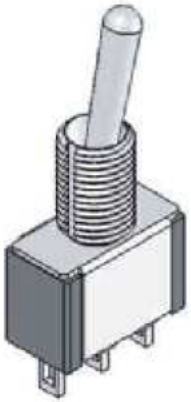

Schematic

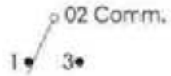

Model No.	Switching Position		
A110	ON	NONE	ON
A120	ON	OFF	ON
A130	ON	NONE	OFF
A140	ON	NONE	ON
A150	ON	OFF	ON
Term Comm.	2-1	OPEN	2-1

SPECIFICATIONS:

CONTACT RATING : 5 AMPS @ 120 V AC or 28 V DC. (UL)
2 AMPS @ 250 V AC
0.4VA AMPS @20 V AC or DC. (UL)
ELECTRICAL LIFE : 6,000 make-and-break cycles at full load.
CONTACT RESISTANCE : 10 mΩ max. Initial @ 2-4 V DC.
100 mA, for both silver and gold plated contacts.
INSULATION RESISTANCE : 1,000 MΩ min.
DIELETRIC STRENGTH : 1,000 V RMS @ sea level.
OPERATING TEMPERATURE : -30 ℃ to 130 ℃

MATERIALS:

CASE : Diallyl phthalate (DAP)(UL-94V-0).
ACTUATOR : ZINC ALLOY.
BUSHING : ZINC ALLOY.
HOUSING : Stainless steel.
TERMINAL/CONTACT : Brass, with silver or gold plated.
or gold over silver.
SWITCH SUPPORT : Brass, tin plated.

APPROVED

REVISION	DESCRIPION	REVISED BY	TOLEANCES .X .XX ANGLE ½°					UNIT mm	PART NAME	SPEC DRAWING	DWG NO
△			DRAWN BY		DESIGNED BY		SCALE				WS1580B
△											
△			CHECKED BY		APPROVED BY		DATE		PART NO	A1#0-T01	
△											