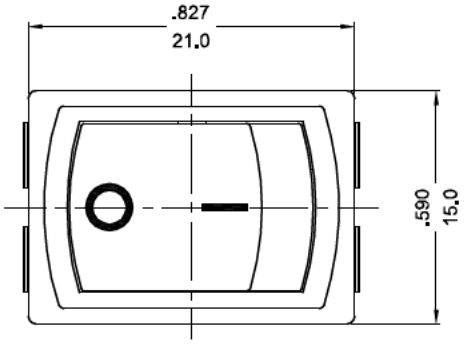

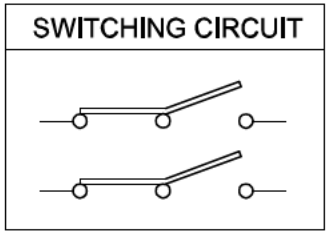

ROCKER SWITCH MODEL: MR-3

RATING: 10A 125/250VAC (UL/CUL)
10(4)A 250V~ T85 (FI/ENEC16)
DIELECTRIC STRENGTH:1000VAC FOR 1 MINUTE
INSULATION RESISTANCE:500VDC 100MΩ (MIN)
CONTACT RESISTANCE:20mΩ INITIAL (MAX)

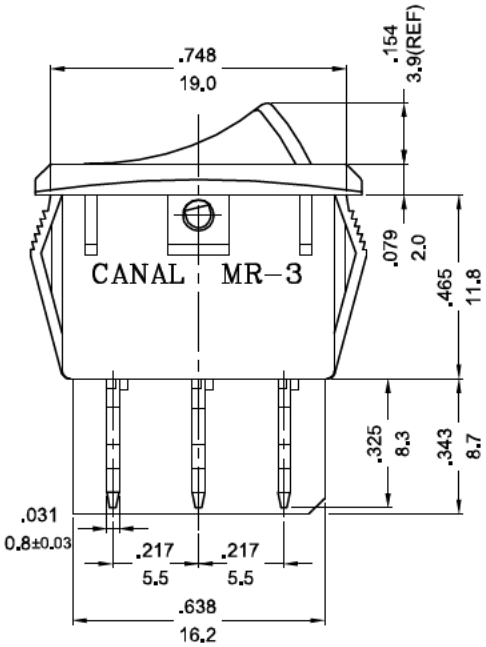

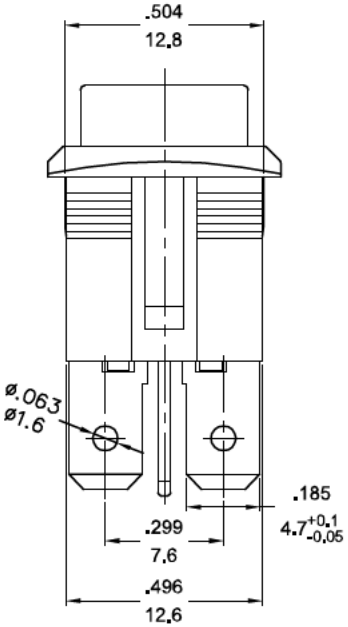

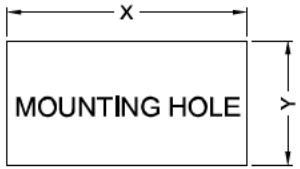

X(CUTOUT DIMENSION)	Y(CUTOUT DIMENSION)	Z(PANEL THICKNESS)
$19.2^{+0}_{-0.1}$ mm	$12.9^{+0.15}_{-0}$ mm	0.75~1.25mm
$19.4^{+0}_{-0.1}$ mm	$12.9^{+0.15}_{-0}$ mm	1.25~2mm
$19.8^{+0}_{-0.1}$ mm	$12.9^{+0.15}_{-0}$ mm	2~3mm

PANEL CUTOUT DIMENSION TABLE

NOTE:TOLERANCES UNLESS OTHERWISE SPECIFIED:± .012/0.3 (in/mm)

REVISION	DESCRIPTION	REVISED BY	TOLERANCES				ANGLE ½°	UNIT	mm	PART NAME	MR-3 SPEC DRAWING	DWG NO
4			DRAWN BY		DESIGNED BY		SCALE	2/1				S3874C
3 2016.01.05	依實物修正柄印字											
2 2013.01.05	整理圖面，重新出圖		CHECKED BY		APPROVED BY		DATE	2010.11.01		PART NO	MR-3-220-C5-BBNWC	
1 2010.11.01	首次出圖											