Rating	16A 125VAC, 10A 250VAC
	10A 125VAC, 6A 250VAC
	10(4)A 250V~
	20A 12V DC, 10A 24VDC
Contact Resistance	50m ohm Max.
Insulation Resistance	DC 500V 100M ohm Min.
Dielectric Strength	AC 1500V 1 minute
Operation Temperature	-25°C~85°C
Switch Function	3P SPDT ON-ON

Mounting Hole

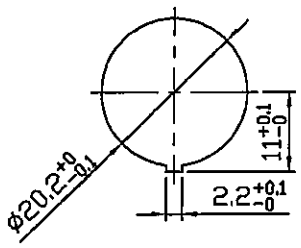

Thickness:2.0~3.0

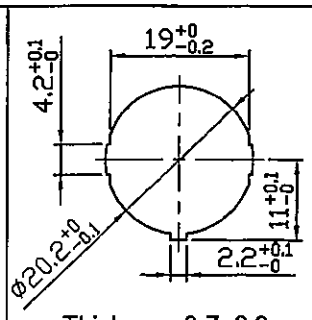

Thickness:0.7~3.0

Circuit Diagram

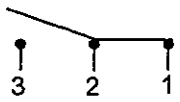

Material:
Frame: Nylon#66, Black
Actuator: Nylon#66, Black
Terminals: Cooper Alloy, Silver plating
Printed: None

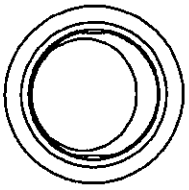

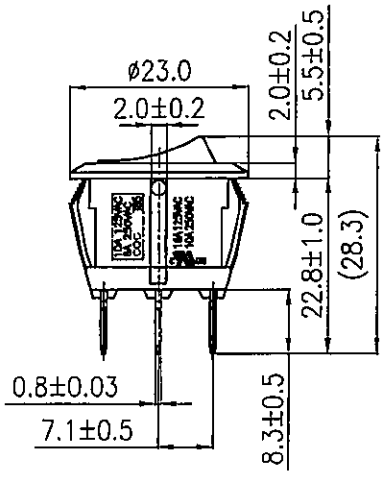

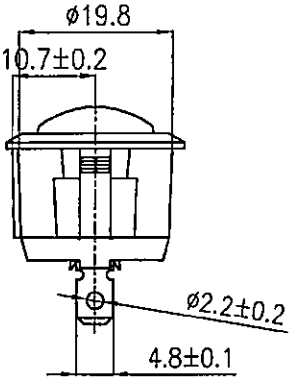

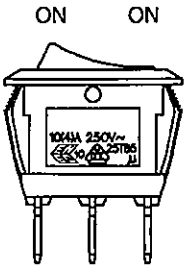

原稿
2015.4.14
研發部

Tolerances ±0.3mm Unless Otherwise Specified