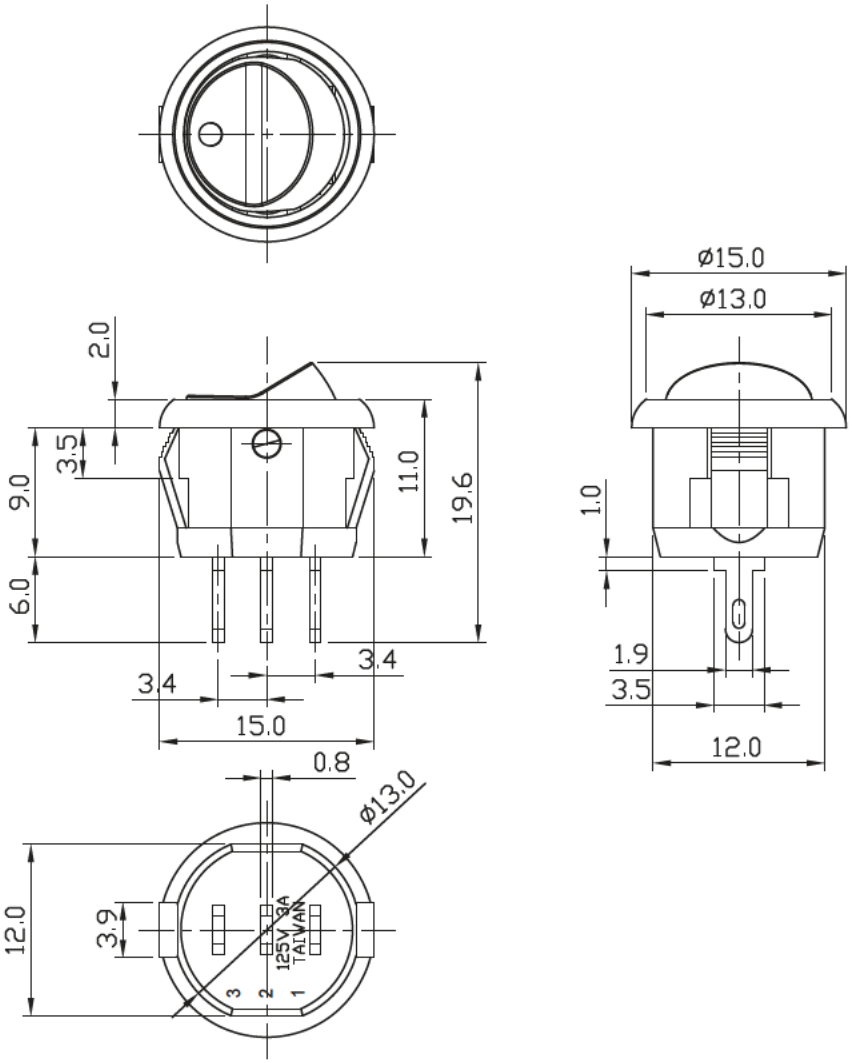


Specification :

Contact resistance: 20mΩ max. (initial)
Insulation resistance: 50MΩ min. (at 500V DC)
Dielectric strength: 1,500V AC 50/60 Hz for 1 minute
Service life: Mechanically: 100,000 operations min.
Electrically: 30,000 operations min.

Rating : 3A 125V AC / 1.5A 250V AC

**Function: ON - ON SPDT**

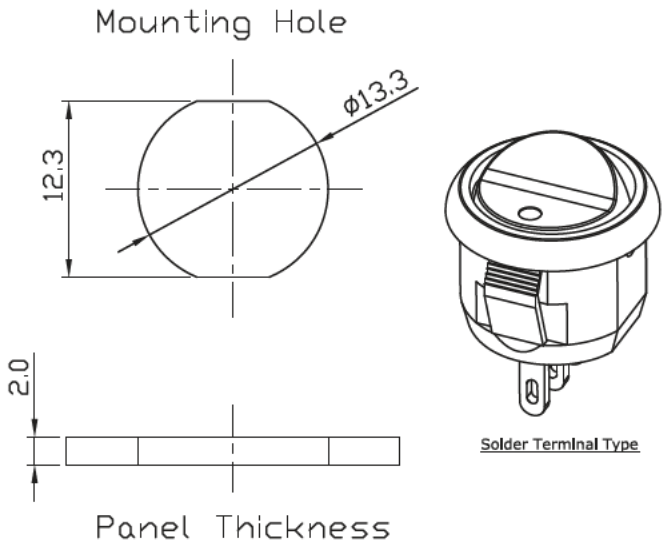


SOCOJE
SOCOJE INTELLIGENT TECHNOLOGY

NOTE: TOLERANCES UNLESS OTHERWISE SPECIFIED : ± .012 (mm).
0.3

| REVISION | DESCRIPION | REVISED BY | TOLEANCES .X .XX ANGLE ½° | | | | | UNIT mm | PART NAME | SPEC DRAWING | DWG NO |
|---|---|---|---|---|---|---|---|---|---|---|---|
| 4 | | | DRAWN BY | | DESIGNED BY | | SCALE | | | | WS1341C |
| 3 2018 01.05 | 修正圖面 | | | | | | | | | | |
| 2 2016. 03. 02 | 修正圖面 | | CHECKED BY | | APPROVED BY | | DATE | 2010. 08. 10 | PART NO | SW-2738-A | |
| 1 2010. 08. 10 | 首次出圖 | | | | | | | | | | |