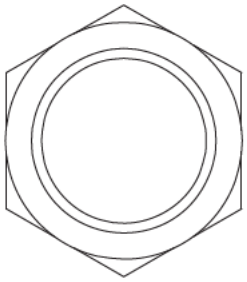

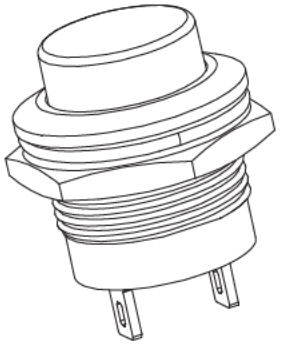

Rating: 6A 125V AC ;
3A 250V AC ;
Contact Resistance: 50mΩ Max. ;
Insulation Resistance:DC 500V 100MΩ Min. ;
Dielectric Strength:AC 1000V 1 minute
Total Travel: 2.4±0.4mm
Operating Force:250±50gf
Operating Life:50,000 cycles
Operating Temperation:0°C~85°C

Function: OFF-(ON)

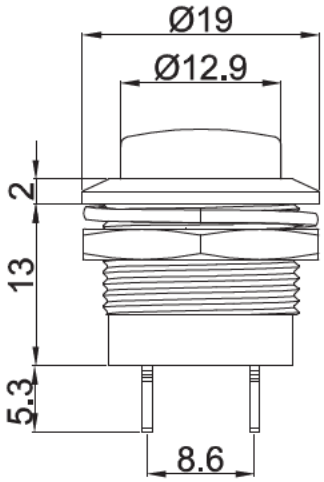

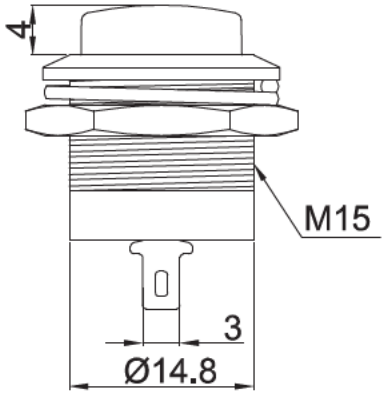

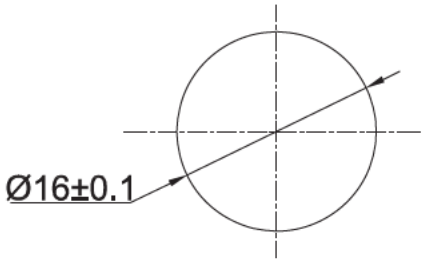

CUT-OUT

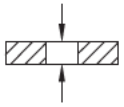

Panel Thinkness: 3mm MAX.

MATERIAL:

Base: Brass,Chrome or Tin plated ;
Cap: ABS ;
Terminal: Copper,Silver or Tin plated ;
Nut: Brass, Ni plated .

角度 ANGLE ± 1°

Y	Yellow
W	White
U	Blue
R	Red
O	Orange
G	Green
B	Black
A	Gray
CAP COLOR (X)	

REVISION	DESCRIPION	REVISED BY	TOLEANCES .X±0.3 .XX ± 0.15 ANGLE ½°					UNIT mm	PART NAME	PB SPEC DRAWING	DWG NO
4			DRAWN BY		DESIGNED BY		SCALE				
3											
2			CHECKED BY		APPROVED BY		DATE	2010. 12. 01	PART NO		
1 2010. 12. 01	換新圖框, 重新出圖										