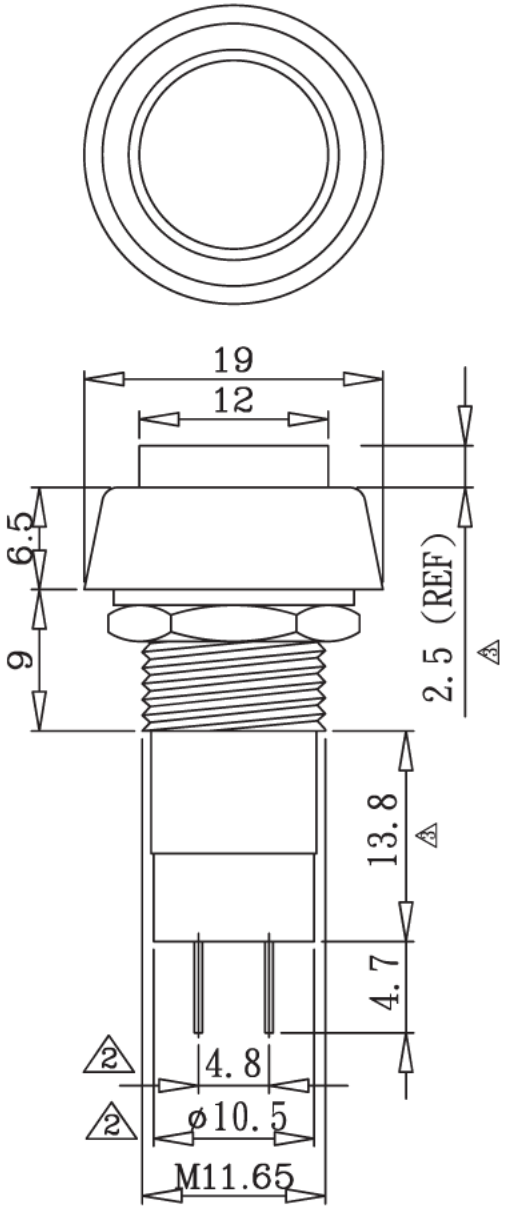

SPECIFICATIONS

1.CIRCUIT : ON－(OFF)
2.RATING : 1A 125VAC/250VAC
3.CONTACT RESISTANCE : 30mΩ Max
4.INSULATION RESISTANCE : DC 500V 100MΩ Min
5.DIELECTRIC STRENGTH : AC 1000V 1 MINUTE
6.ELECTRICAL LIFE : 5000 CYCLE Min
7.MECHANICAL LIFE : 10,000 CYCLE Min
8.TERMINAL MATERIAL : COPPER,ALLOY,(SILVER OR GOLD),PLATED
9.PUSH FORCE : >0.3kg
10.BUTTON COLOR : RED, BLACK

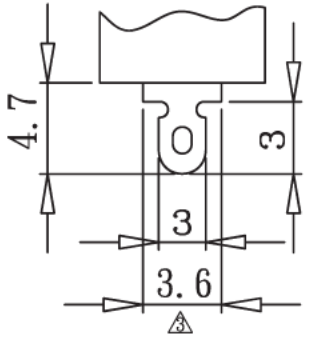

NOTE: TOLERANCES UNLESS OTHERWISE SPECIFIED: ± 0.3 (mm)

REVISION	DESCRIPION	REVISED BY	TOLEANCES .X .XX ANGLE ½°					UNIT mm	PART NAME	PBS SPEC DRAWING	DWG NO
4			DRAWN BY		DESIGNED BY		SCALE				WS0704C
3 2007.11.12	修改尺寸										
2 2007.09.04	修改尺寸		CHECKED BY		APPROVED BY		DATE	2006.08.29	PART NO	PBS-11 C	
1 2006.08.29	換新圖框 重新出圖										