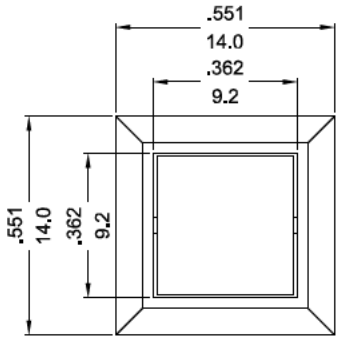

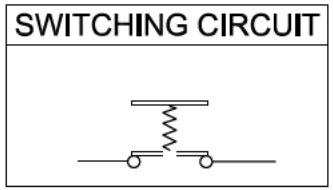

PUSH SWITCH MODEL PS17-6 SERIES
RATING: 1A 125VAC
INSULATION RESISTANCE:100MΩ (MIN), DC 500V
DIELECTRIC STRENGTH:1000VAC FOR 1 MINUTE
CONTACT RESISTANCE : 20m Ω INITIAL (MAX).
OFF-(ON) = PUSH ON

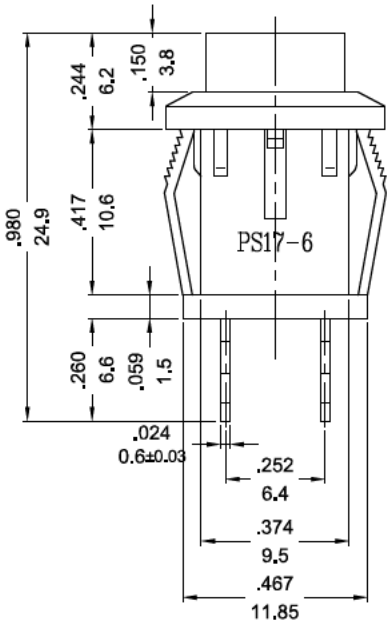

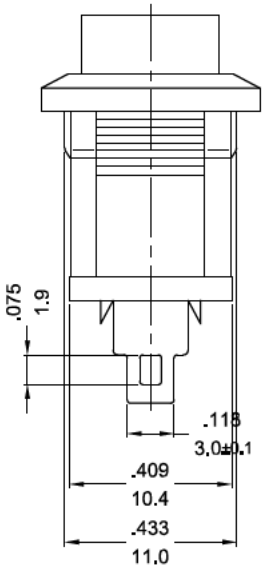

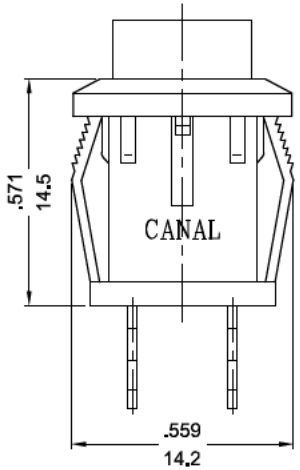

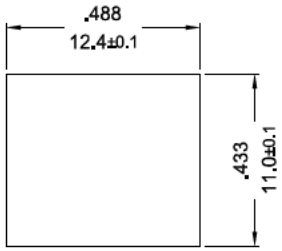

MOUNTING HOLE

NOTE:TOLERANCES UNLESS OTHERWISE SPECIFIED:± .012/0.3 (in/mm)

REVISION	DESCRIPTION	REVISED BY	TOLERANCES				ANGLE ½°	UNIT	mm	PART NAME	PS17-6 SPEC DRAWING	DWG NO
4 2011.07.14	依最新出圖要求,整理出圖		DRAWN BY		DESIGNED BY		SCALE	2/1				
3 2009.11.04	更換圖框，整理圖面，重新出圖											
2 2006.05.09	增加動作力規格，重新出圖		CHECKED BY		APPROVED BY		DATE	2006.03.14		PART NO		
1 2006.03.14	首次出圖											